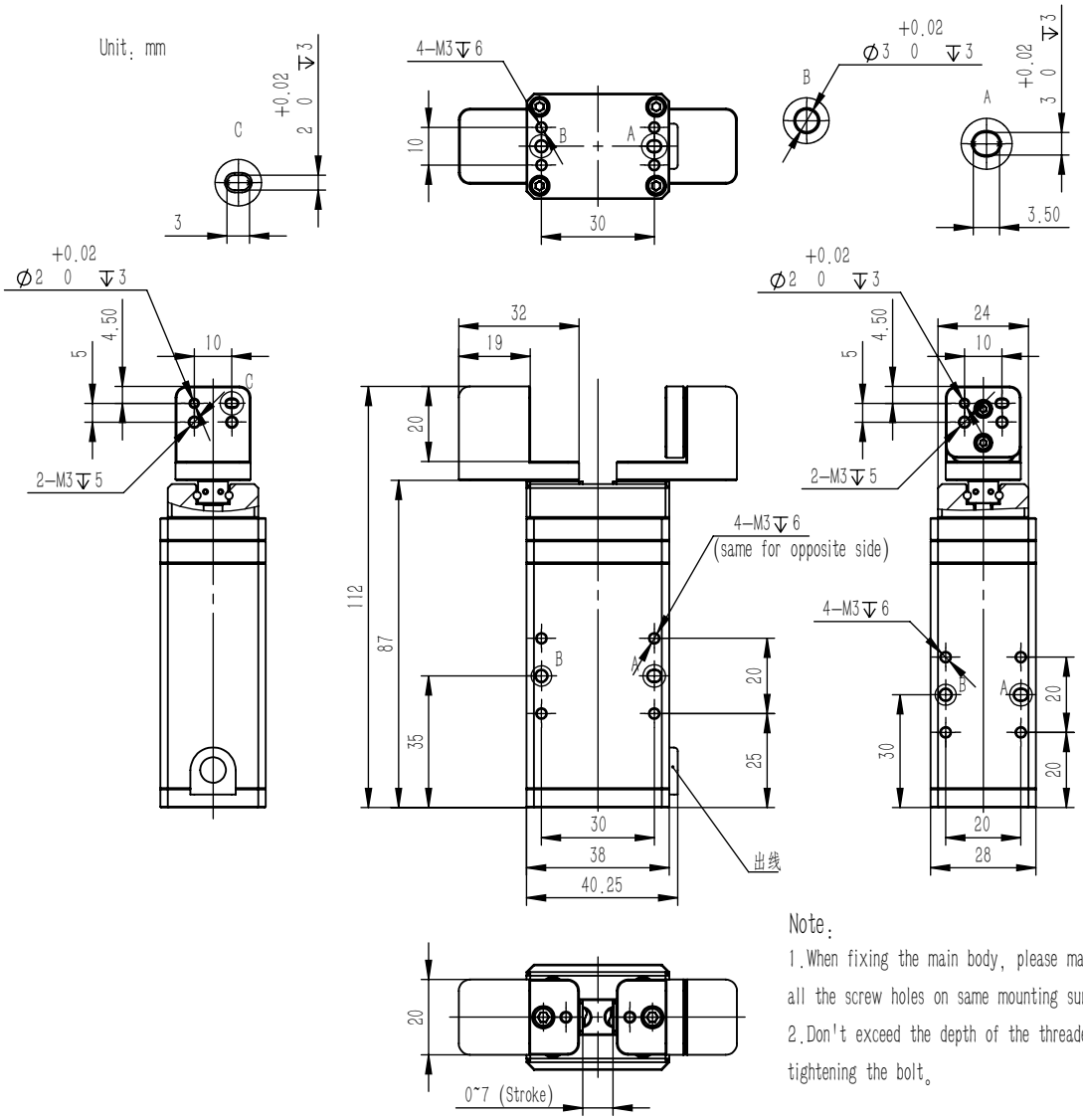


Note:

1. When fixing the main body, please make use of all the screw holes on same mounting surface;
2. Don't exceed the depth of the threaded hole when tightening the bolt。