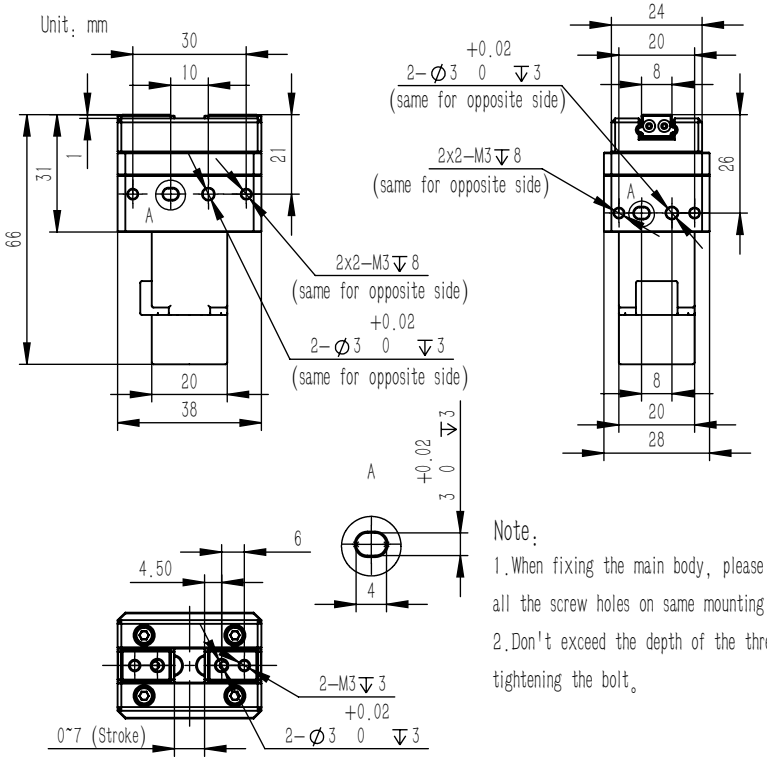

Note:

1.When fixing the main body, please make use of all the screw holes on same mounting surface;

2.Don't exceed the depth of the threaded hole when tightening the bolt。